

Introduction to

Universal Round Bar™ (URB)

Table Mounted Retractor (TMR) Systems

Universal Round Bar TMR Systems
PRODUCT OVERVIEW


Bookler ®TMR System

The **Universal Round Bar™** Table Mounted Retractor is a concept that is ***functionally*** identical to the Bookwalter® TMR but…is designed very differently.

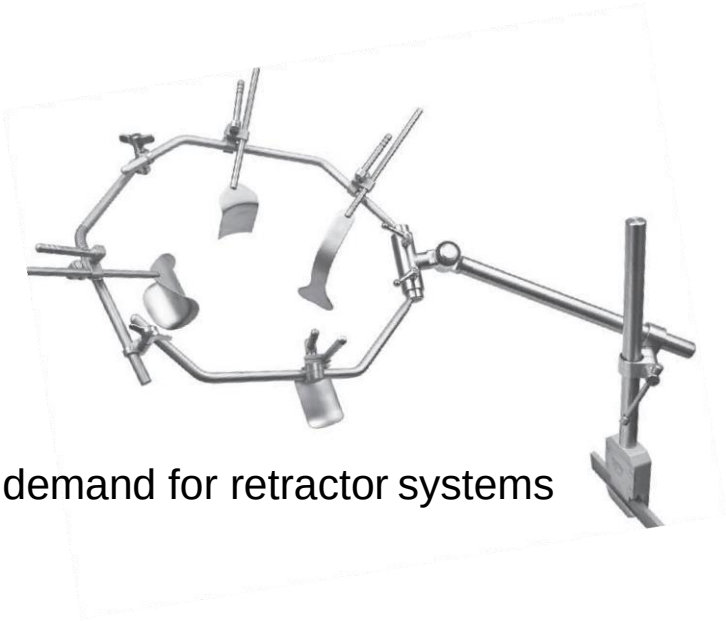

The origins of the Universal Round Bar™ TMR system…

1. Success of the original Bookwalter® System created demand for retractor systems
2. Patents prevented companies from duplicating it
3. Omni-Tract® Surgical and Thompson Surgical Instruments developed alternative TMR Systems which did not infringe on patents - resulting in certain differences

Universal Round Bar TMR Systems
PATENTS & DEVELOPMENTS

Patent No. 1: Ring Shape

The flat, scallop-edged ring in the Bookwalter System was patented…



So, Omni-Tract® and Thompson developed “Rings” made from round bars.

Patent No. 2: Ring Design



So Omni-Tract® and Thompson developed **open** frames of 2 basic types…a S*plit Ring* and a *Bilateral Frame*

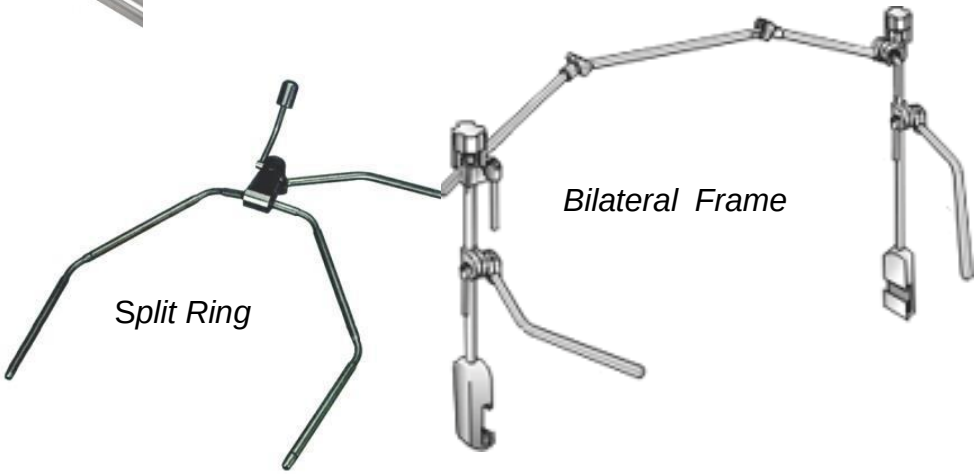

Patent No. 3: Ratchet Mechanism

Ratchet mechanism was patented…



So Omni-Tract® and Thompson developed “Snap Clamps” to fit on round bars.

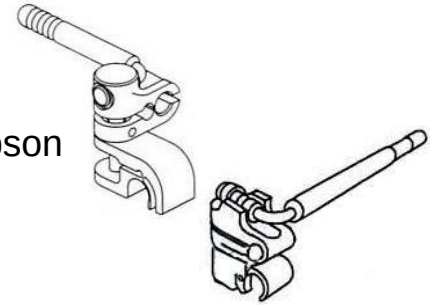

Universal Round Bar TMR Systems
PATENTS & DEVELOPMENTS

Patents and development of Round Bar™ systems

The 3 design changes based on avoiding Bookwalter patent issues necessitated another significant change…

The Blades of a Round Bar need to swivel where they attach to their handle.

This is necessary to allow for retraction in the direction of the gap in a Round Bar Frame.

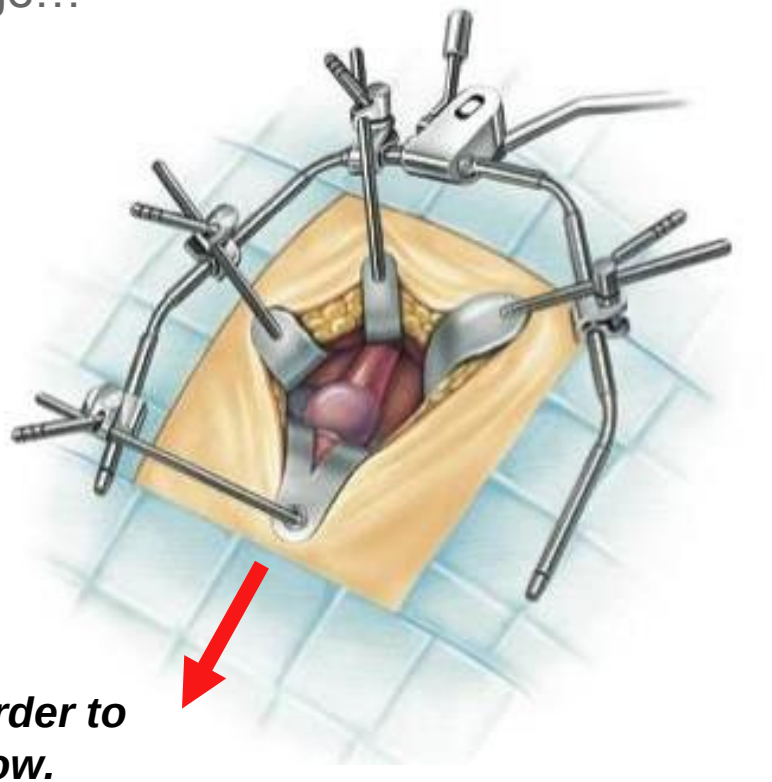

Note how this blade swivels in order to retract in the direction of the arrow.

Universal Round Bar TMR Systems

PRODUCT OVERVIEW

Round Bar™ System includes:

1. Bookler® Field Posts and Couplers
2. Vertical Extension Bar / Kit
3. Split-Ring (Wishbone) Design – 2 sizes
4. Frame with Interchangeable Arms
5. A Bridge to “close” the split ring or the side arms of the Bilateral System
6. Bilateral Frame with Cross Bar

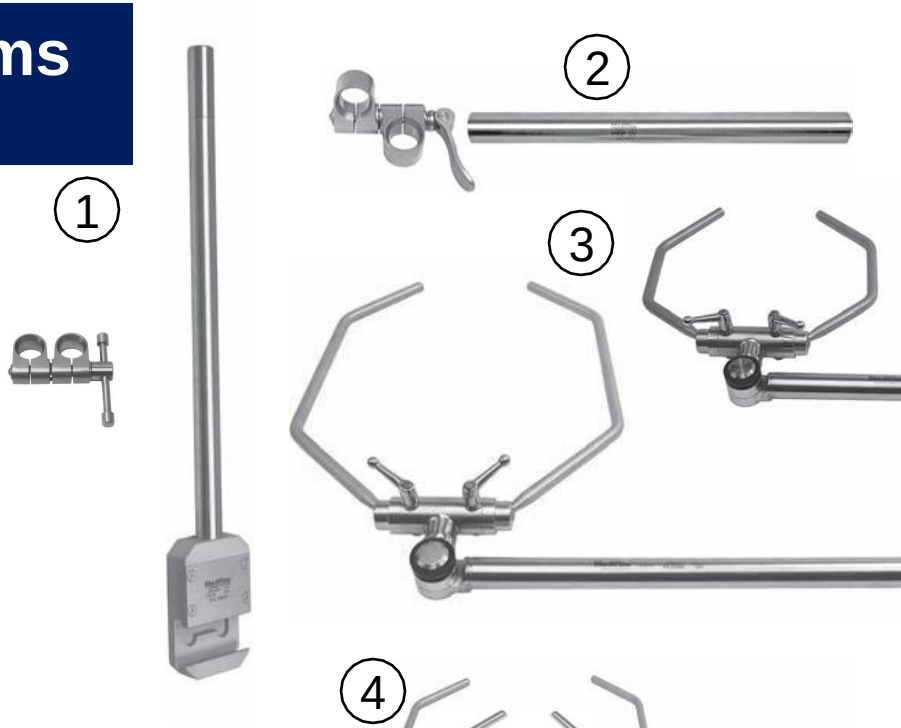

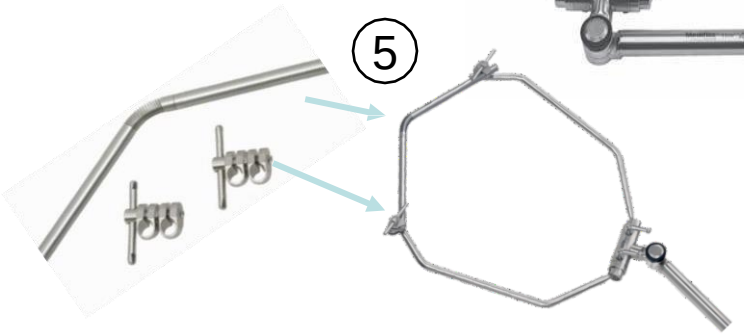

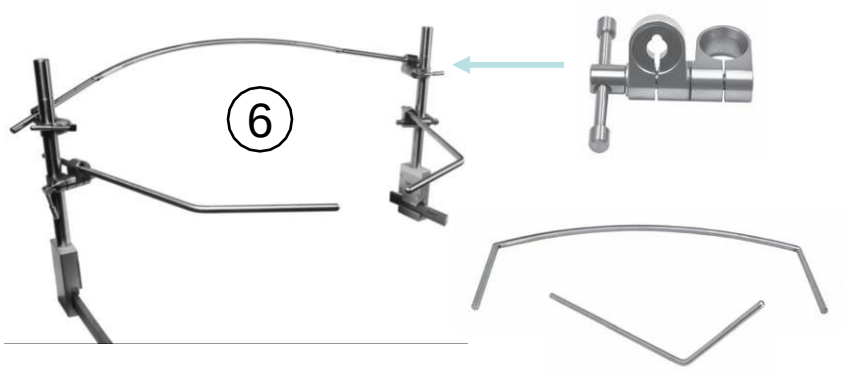

Universal Round Bar TMR Systems
PRODUCT OVERVIEW

Key Round Bar™ System Components



Bookler® Field Posts and couplers

Faster, less complicated set-up

Split-Ring (Wishbone) Design

Three distinct locking mechanisms, allow for…

- Individual adjustments
- Single handed split-ring positioning

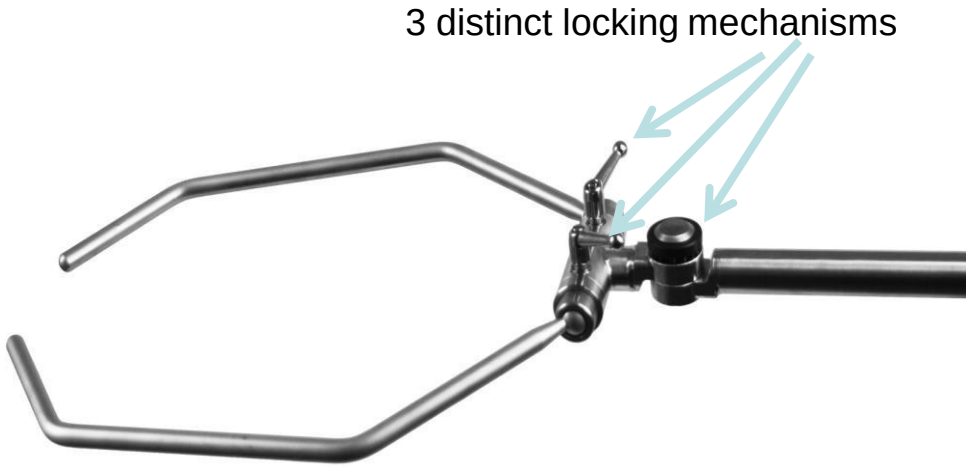

Universal Round Bar TMR Systems
PRODUCT OVERVIEW

RETRACTOR FRAME OPTIONS

One-Piece Frames with Integrated Horizontal Bar
Available in two popular sizes for different needs

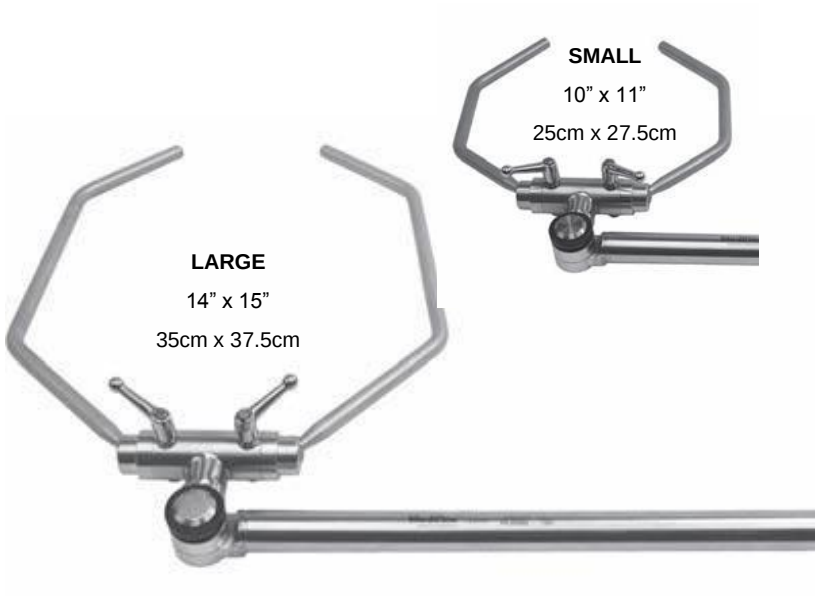

Frame with Clasper Bar
For use with StrongArm Plus or Horizontal Bars





Frame with Interchangeable Arms
Interchangeable arms allow for size change



Universal Round Bar TMR Systems
PRODUCT OVERVIEW

StrongArm™ Plus System & Components



Mini-Clasper
with Hex Fitting







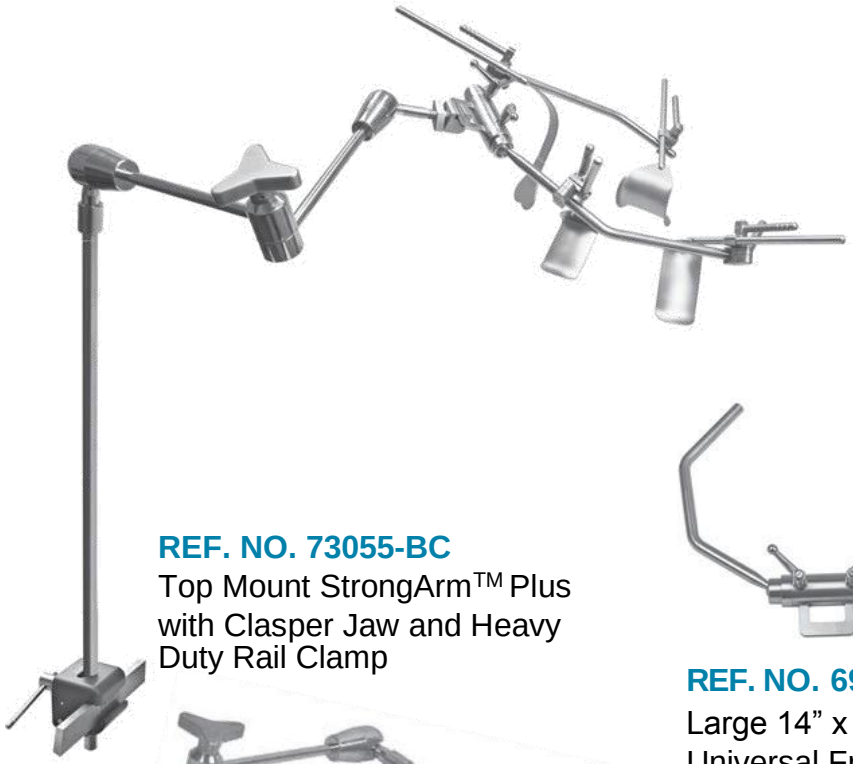

REF. NO. 73055-BC
Top Mount StrongArm™ Plus with Clasper Jaw and Heavy Duty Rail Clamp

REF. NO. 69589-CL
Large 14” x 15”
Universal Frame with Clasper Bar



REF. NO. 69589-CS
Small 10” x 11”
Universal Frame with Clasper Bar

REF. NO. 73055
Top Mount StrongArm™ Plus with Quick-Connect Tip and Heavy Duty Rail Clamp (69099)

Universal Round Bar TMR Systems

PRODUCT OVERVIEW

Quick-Lock Snap Clamps





Bookler Quick-Lock Snap Clamps
For Bookler and Bookwalter-style blades

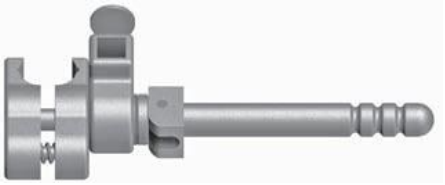

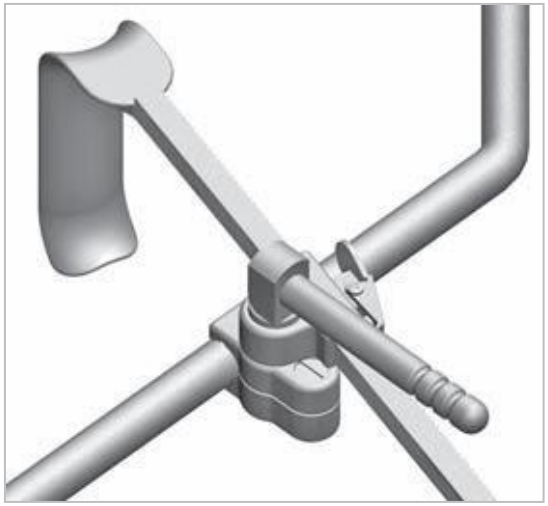

Omni-Tract Clamp

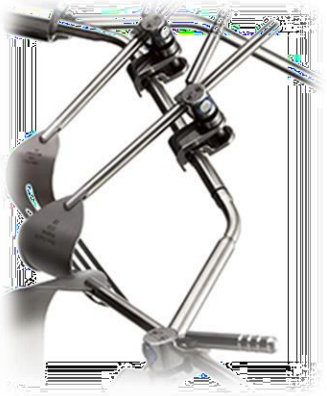

Thompson Clamp



Universal Round Bar TMR Systems

PRODUCT OVERVIEW

NOW OFFERING…

Controlled retraction of tissue, helpful for costal margin retraction

Twist Ratchet Adapter

used with Bookler retractor blades for precise, ‘click-by-click’ retraction



NEW BLADE

Swivel Blade, Sternal, 3” x 3” Bookler Handle
(69615-SW)





Micro-Adjustable mechanism



Universal Round Bar TMR Systems

RETRACTOR BLADE OVERVIEW

Wide Variety of Swivel Blades and Sizes



Richardson

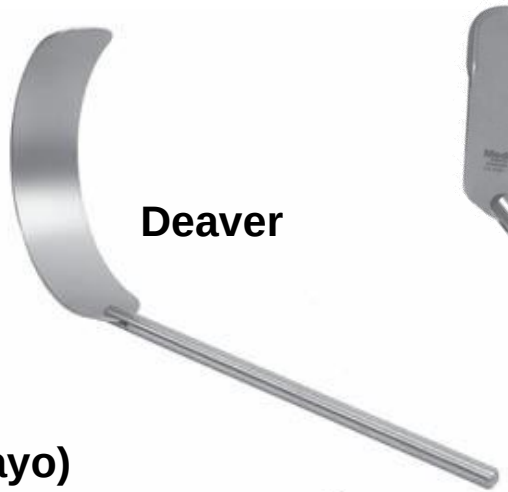

Deaver



Malleable w/Protective Edge

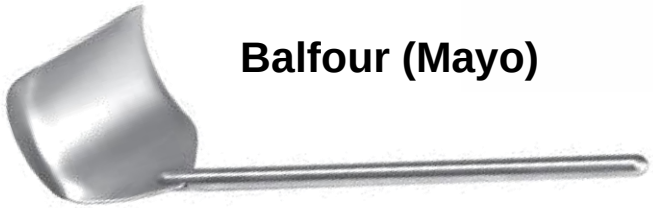

Balfour (Mayo)



Double Angled



Sternal



Finger Fence



Harrington

Kelly URB Swivel Blades

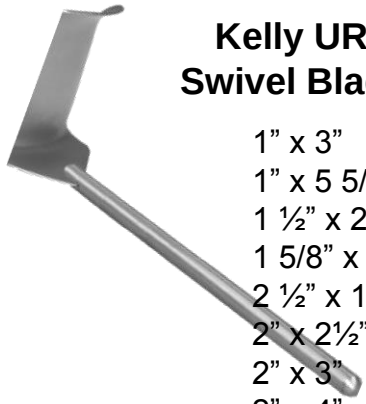

1” x 3”
1” x 5 5/8”
1 ½” x 2
1 5/8” x 2 2/3”
2 ½” x 10”
2” x 2½”
2” x 3”
2” x 4”
2” x 5”
2” x 6”
2” x 8”
3” x 2 ½”
3” x 3 ½”
3” x 4”
3 ½ “ x 4 ¼”
3 ½” x 2 ½”
3 ½” x 4”

Universal Round Bar TMR Systems

SYSTEM SET-UP

1. Attach Field Post to OR table rail - on side where surgeon will operate





2. Insert the URB Frame into the Post Coupler (closest to tightening knob)



3. Attach the Post Coupler to the Field Post and tighten



4. Adjust the URB Frame according to the procedure/anatomy



5. Attach Snap Clamp onto the Retractor Blade

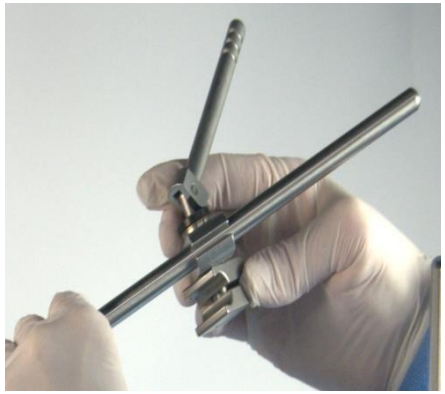

6. Secure Snap Clamp handle (in-line with Blade handle) onto URB Frame.



7. Add Retractor Blades around URB Frame as required for procedure.



Universal Round Bar TMR Systems

CLINICAL APPLICATION

Radical Hysterectomy with Appendages and a Fragment of the Left Ureter

Performed by Prof. Pawel Blecharz – Gynecologic Oncologist, at Chrzanow Regional Hospital, Poland

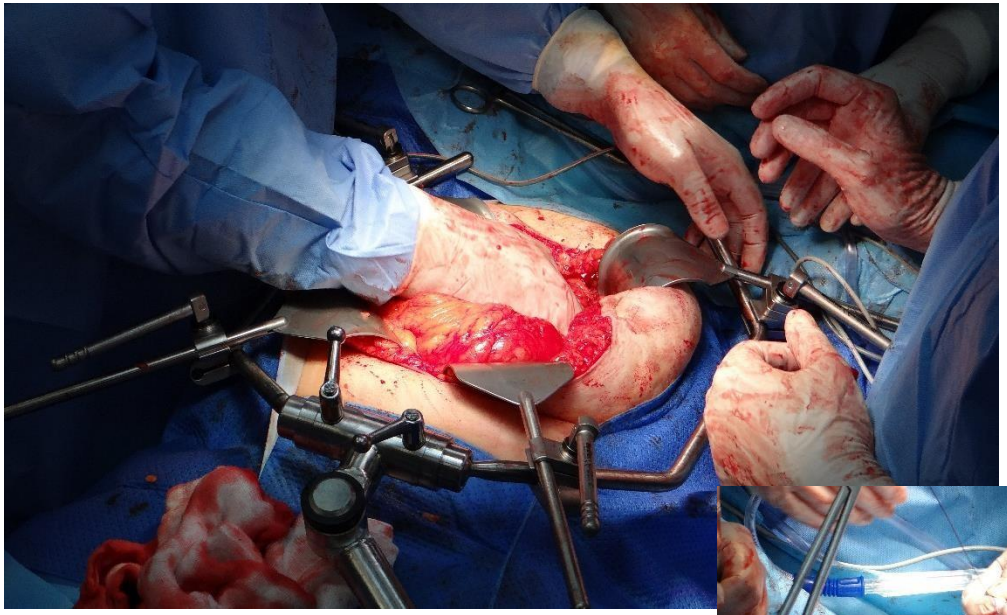

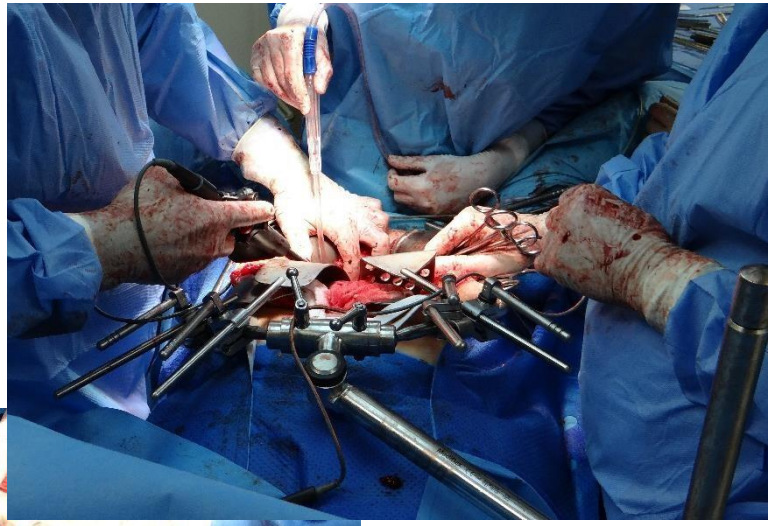



Universal Round Bar TMR Systems

CLINICAL APPLICATION

Pancreatic Necrosectomy with Cholecystectomy

Performed by Dr. Mohammed Hassan – General / Bariatric Surgery, at Serdem Private Hospital, Iraq



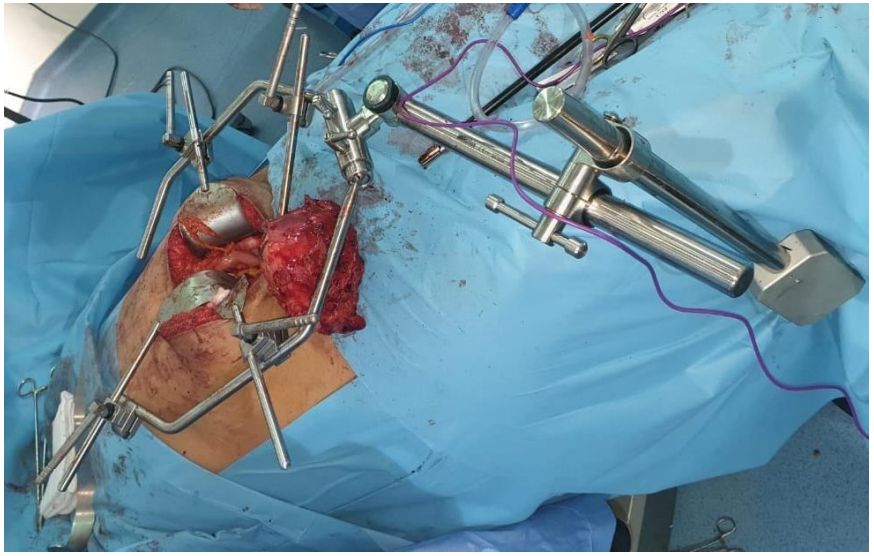

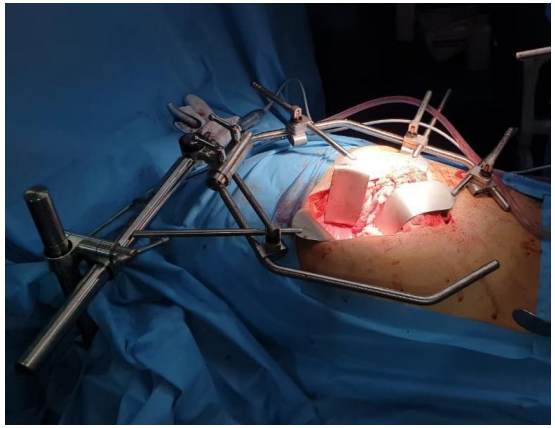

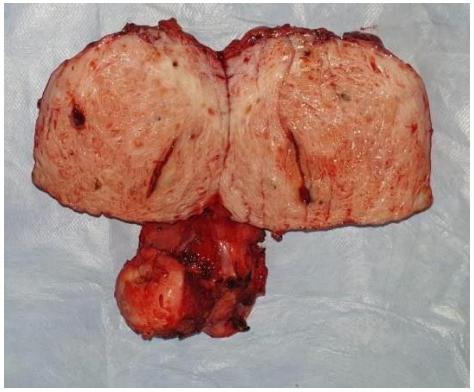

Universal Round Bar TMR Systems

PRODUCT OVERVIEW

Bilateral Systems

For Liver Transplants and Upper Abdominal Procedures

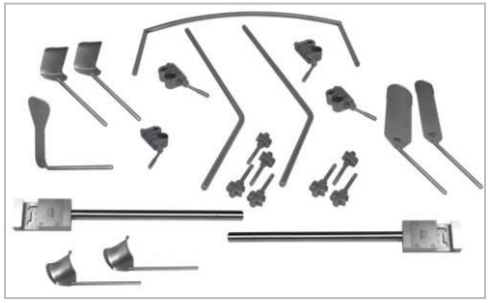

Bilateral System









OmniTract Bilateral System

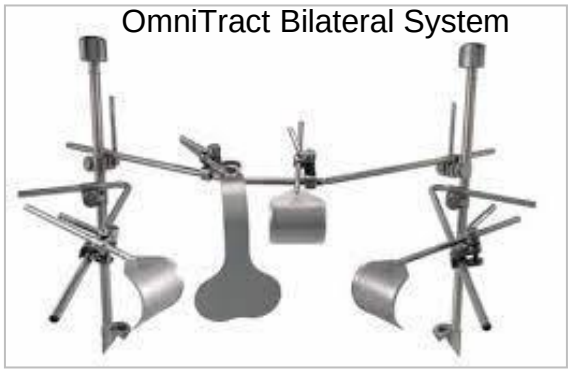

Angled Arms

8” x 10”

8” x 16”

11” x 13”

Universal Round Bar TMR Systems

PRODUCT OVERVIEW

Bilateral Systems

For Liver Transplants and Upper Abdominal Procedures

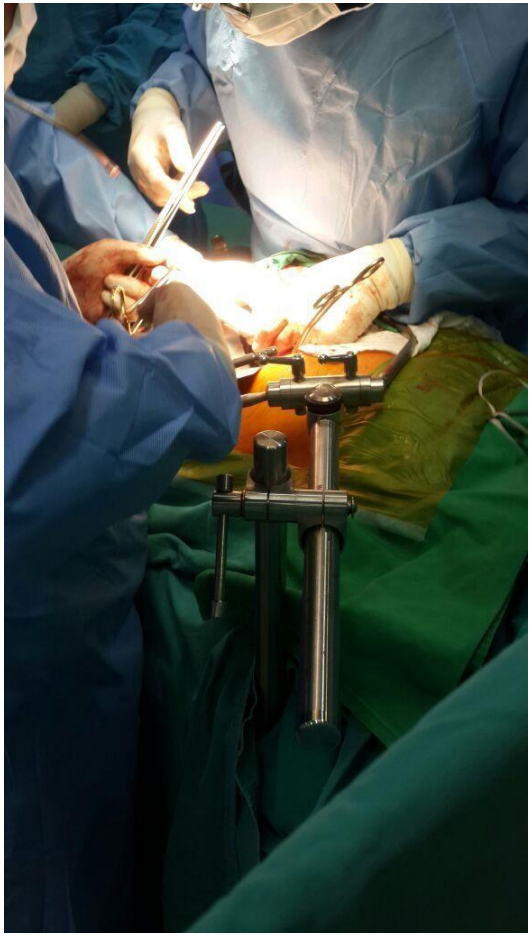

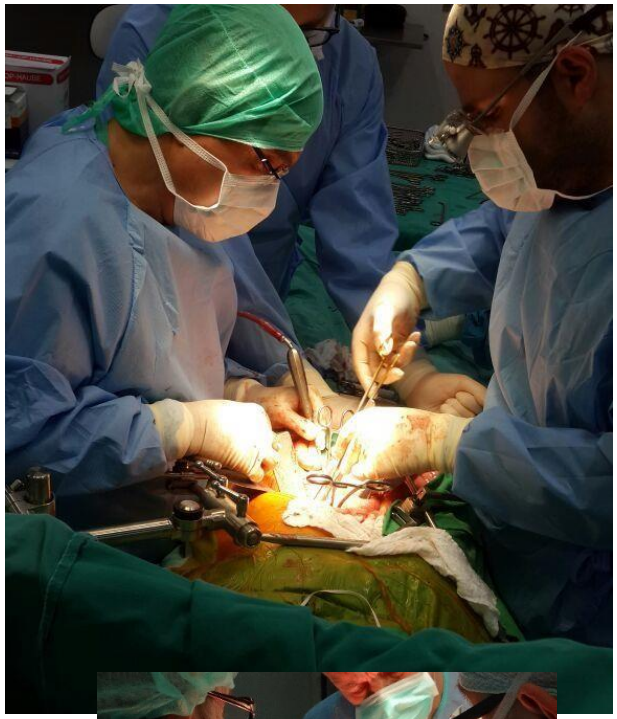

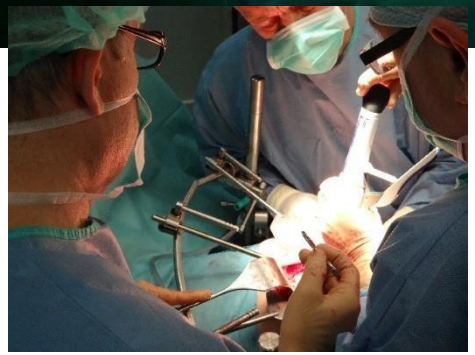





Universal Round Bar TMR Systems

BILATERAL SYSTEM SET-UP

1. Field Posts are set-up on opposite sides of the OR table



2. Two 1” to ½” Couplers are added to each Field Post, Bilateral Cross Bar is added to the higher set of Couplers



3. Angled Arms are added to lower set of Couplers



4. Retractor Blades are attached to URB Frame as needed

Universal Round Bar TMR Systems
PRODUCT OVERVIEW

Bookler Endoscopic FlexArm™ Plus



Expanded versatility…





Endoscopic procedure easily converted to open procedure



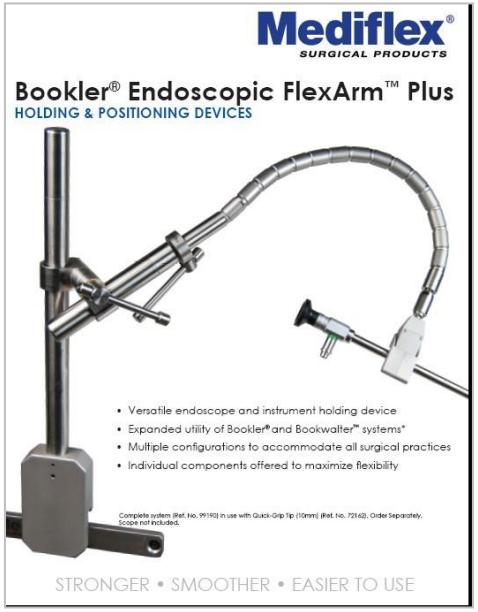

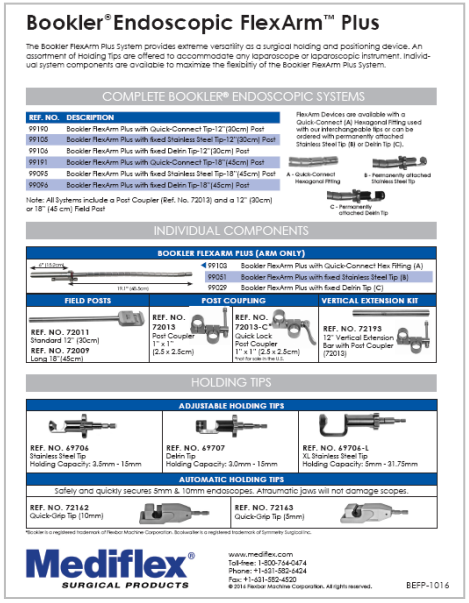

Universal Round Bar TMR Systems
ACCESSORIES

Flex-Light™ Holder for Universal Round Bar™ Frames

Fits into the Snap Clamp and allows the Flex-Light™ to be mounted on a Round Bar™ frame.



Snap Clamp



Frame Clip



Malleable Fiber Optic Light Pipe



Malleable Blade Bending and Shaping Tool











Universal Round Bar TMR Systems

PRE-CONFIGURED SYSTEMS

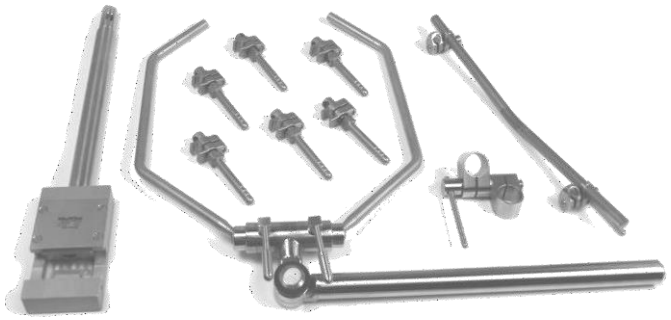

Starter System without blades



Urology System

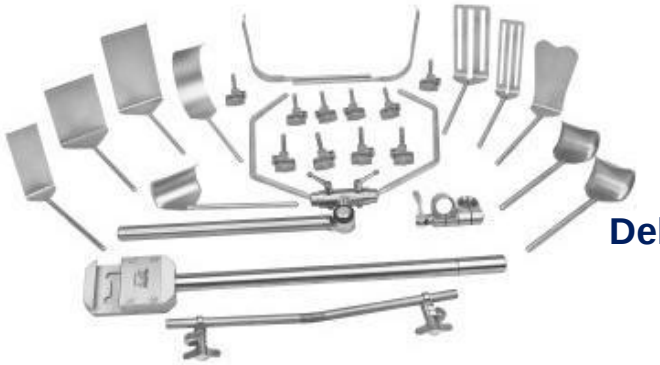

Deluxe Vascular System

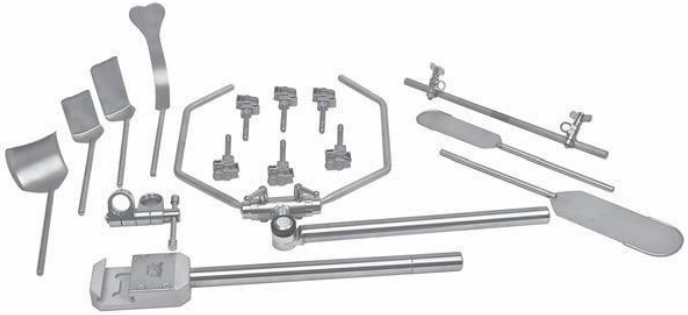

General Surgery Systems

Bariatric
Accessory Set

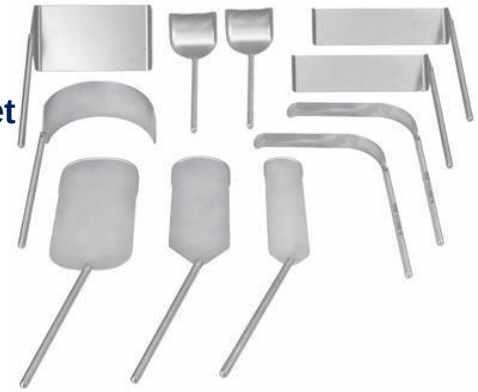

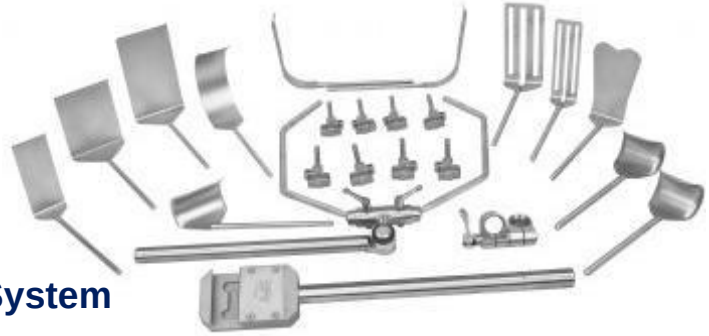

Vascular System